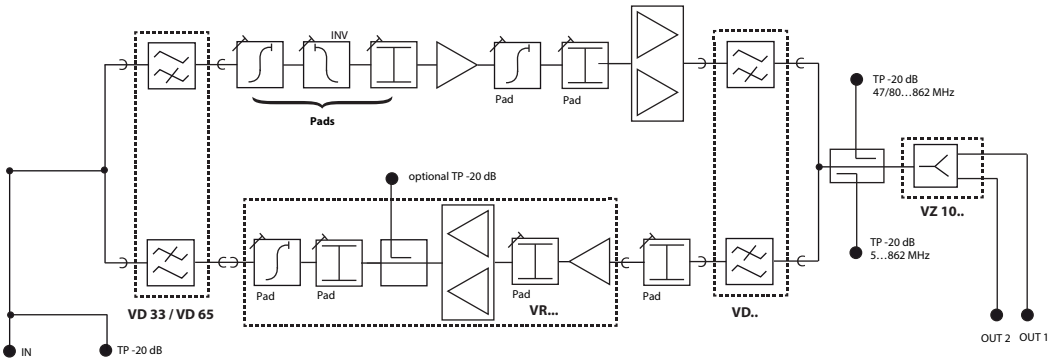
INV
Pads
Pad
Pad
TP -20 dB
47/80…862 MHz
optional TP -20 dB
VZ 10..
TP -20 dB
5…862 MHz
Pad
Pad
Pad
Pad
VD 33 / VD 65
VR...
VD..
OUT 2
OUT 1
IN
TP -20 dB